FOR-1351 Rev.1.0

REVISION RECORD				
REV	ECN	DESCRIPTION	DRFT	DATE

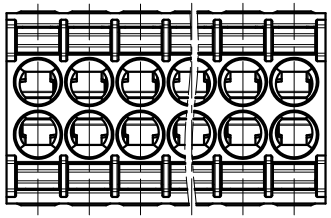

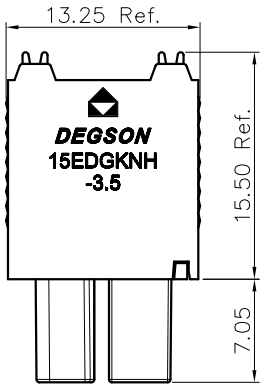

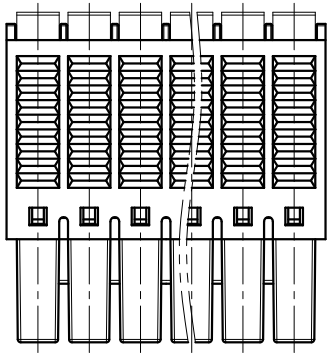

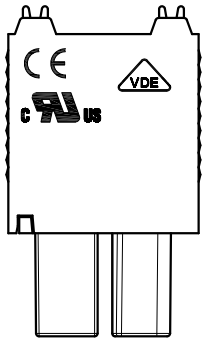

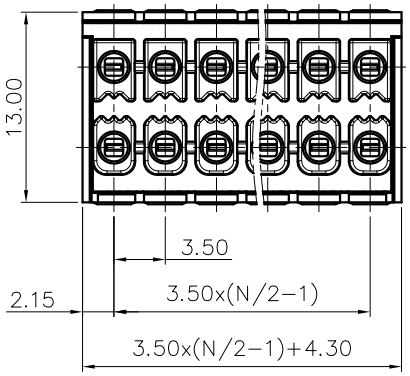

NOTES1:

UL Standard

1.Rated voltage/current : 150V / 8A

2.Withstanding voltage : AC1500V/1Min.

3.Wire range : 26~16AWG

IEC Standard

1.

Pollution Degree	2	2	3
Overvoltage Category	II	III	III
Rate Impulse Voltage(KV)	2.5KV	2.5KV	2.5KV
Rate Voltage(V)	320V	250V	200V
Rate Current(A)	9.5A		

2.Wire range : 0.2~1.5mm^2

NOTES2:

1.Dimension shall be interpreted per ASME Y14.5-2009

2.Pitch : 3.50mm, Poles : N=04~48P

3.Stripping length : 10mm

4.Operating temperature: -40°C~+105°C

5.Undimensioned tolerances:

Pitch range in mm			Nominal dimension range in mm					— ⌒ ⌭
TO 6	Over 6 TO 10	Over 10 TO 24	TO 30	Over 30 TO 60	Over 60 TO 100	Over 100 TO 150	Over 150	0.1/10 ∠
±0.15	±0.20	±0.30	±0.30	±0.50	±0.70	±1.00	±1.30	±2°

6.RoHS Compliance

15EDGKNH - 3.5 - XXP - 1Y - 00A (H)

- (Series No.)
- (Pitch)
- (Poles)
- (Single Pitch)
- (Color): 1.(Grey) 2.(Blue) 3.(Black) 4.(Green) 5.(Orange) 6.(Red) 7.(Transparent) 8.(Yellow) 9.(White)
- 00A-(Standard)
- (RoHS)

DETACHED LISTS			
PART NO.: /	DEGSON® 宁波高松电子有限公司 NINGBO DEGSON ELECTRICAL CO., LTD		
APPD: /	NAME: 15EDGKNH-3.5-XXP-1Y-00A(H)		
CHKD: /			
DRFT: /	TITLE: CUSTOMER DRAWING	REV	DO
THIRD ANGLE PROJECTION	DRAWING NO.: /	SHEET	1/1
	MM (INCH) DO NOT SCALE DRAWING	SCALE	1:1